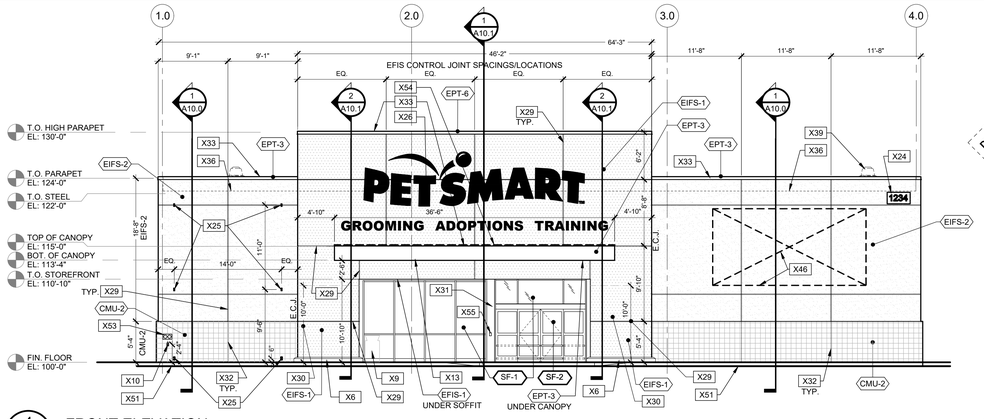

4 A4.0 FRONT ELEVATION
SCALE: 1/8" = 1'-0"

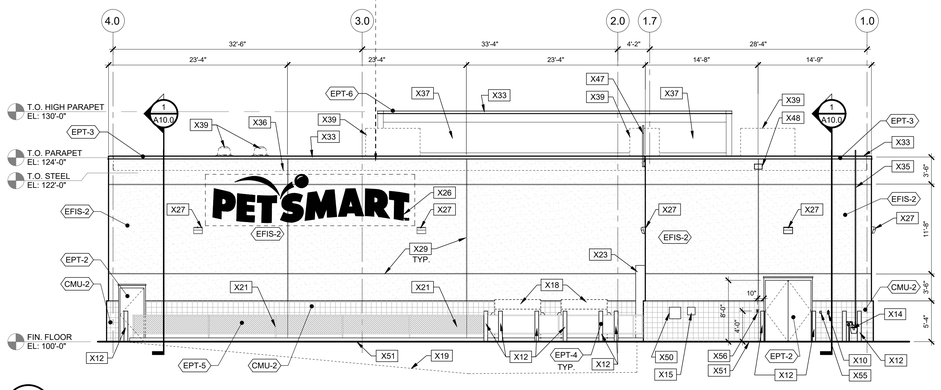

3 A4.0 REAR ELEVATION
SCALE: 1/8" = 1'-0"

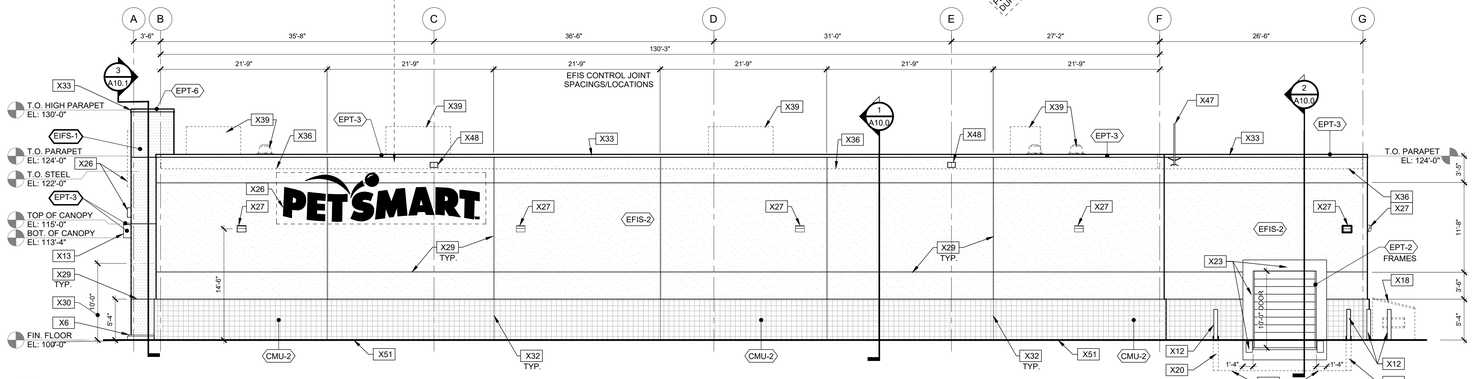

2 A4.0 RIGHT ELEVATION
SCALE: 1/8" = 1'-0"

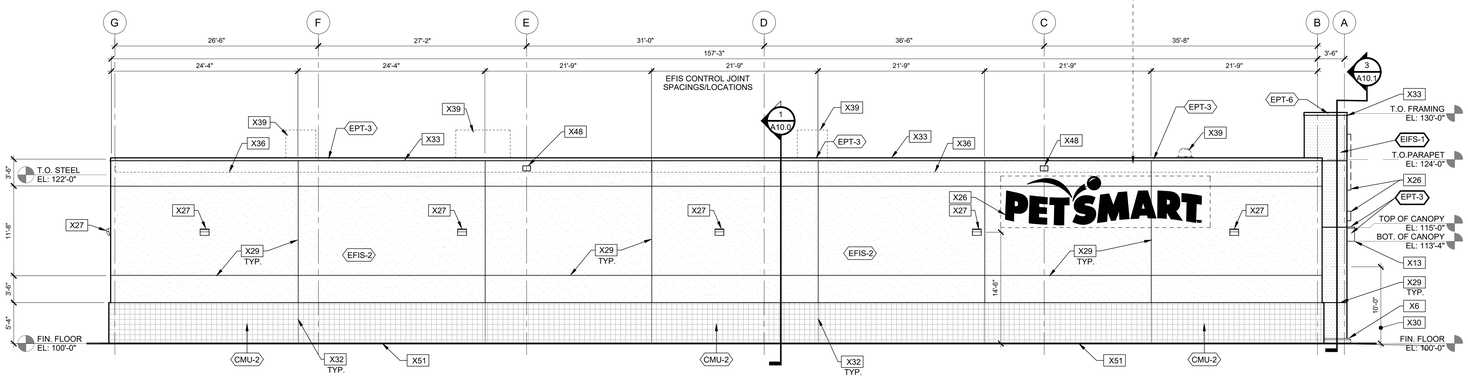

1 A4.0 LEFT ELEVATION
SCALE: 1/8" = 1'-0"

DESIGNER NOTE: PARAPET HEIGHTS SHALL BE IMPRESSED ASTHETICALLY TO PETSMART ON PROJECT SPECIFIC BASIS TO BE CONSISTENT WITH PROPORTION WITH OTHER MAJOR TENANTS IN THE CENTER. COORDINATE SHOWN PROTOTYPICAL PARAPET HEIGHTS AND ENTRY FEATURE WITH BUILDING 24'-0" HEIGHTS REQUIRED (24'-0") ARE MINIMUM.

DESIGNER NOTE: BIRD DEFERENT FIX DRIP TRACK SYSTEM TO BE INSTALLED ONLY ON PROTOTYPICAL CANOPY ON NON-PROTOTYPICAL ENTRY CANOPY WITHOUT AN EFIS BROW CANOPY, THE BIRD DEFERENT FLEX STRIP TRACK SYSTEM SHOULD BE DELETED.

DESIGNER NOTE: COORDINATE WALL PACKS WITH SITE CONDITIONS. ADD WALL PACKS AS NEEDED.

DESIGNER NOTE: ADDITIONAL PETSMART SIGN OPPORTUNITIES. COORDINATE WITH PETSMART & SIGNAGE VENDOR DURING PRE-DESIGN KICK OFF CALL.

DESIGNER NOTE: SPECIFIC BASIS, LOW-E GLASS SPECIFICATION ON A PROJECT SPECIFIC BASIS TO MEET REGIONAL EEC REQUIREMENTS. COORDINATE WITH GLASS TYPES ON SHEET A6.1. REFER TO TABLE 402.4 FENESTRATION (PRESCRIPTIVE) ON SHEET A6.1 FOR ADDITIONAL INFORMATION.
TYPICAL SOLARBAN OPTIONS
SOLARBAN 60 (2) + CLEAR - VLT=70 U-VALUE=0.29 SHGC=0.39
SOLARBAN 70 (2) + CLEAR - VLT=64 U-VALUE=0.29 SHGC=0.27
SOLARBAN 90 (2) + CLEAR - VLT=51 U-VALUE=0.29 SHGC=0.23

GENERAL NOTES:

1. SEE SHEET A0.1 FOR ARCHITECTURAL KEY NOTES

MATERIAL/FINISH SCHEDULE (EXTERIOR):

	MATERIAL	FINISH COAT(S)	COLOR
CMU-1	SMOOTH FACE C.M.U.	2 COATS DULUX WEATHER GUARD EXT. FLAT -1536	PAINT PPG PAINTS #PPG1007-5 "LAZY AFTERNOON"
CMU-2	SINGLE SCORE C.M.U.	2 COATS DULUX WEATHER GUARD EXT. FLAT -1536	PAINT PPG PAINTS #PPG1007-6 "COOL CHARCOAL"
EIFS-1	E.I.F.S.	2 COATS DULUX WEATHER GUARD EXT. FLAT -1530	PAINT PPG PAINTS #PPG1002-2 "ARCTIC COTTON" SAND FINISH
EIFS-2	E.I.F.S.	2 COATS DULUX WEATHER GUARD EXT. FLAT -1538	PAINT PPG PAINTS #PPG1007-5 "LAZY AFTERNOON" SAND FINISH
EPT-1	OVER FLOW SCUPPERS	PAINT DRIP GALVANIZED 2 COATS PITT-TECH DIRECT-TO-METAL SEMI-GLOSS 90-1210	PAINT PPG PAINTS #PPG1007-5 "LAZY AFTERNOON"
EPT-2	DOORS & FRAMES	2 COATS PITT-TECH DIRECT-TO-METAL SEMI-GLOSS 90-1210	PAINT PPG PAINTS MATCH CMU WALL COLOR
EPT-3	COPING / STEEL PLATE	PAINT DRIP GALVANIZED 2 COATS PITT-TECH DIRECT-TO-METAL SEMI-GLOSS 90-1210	PAINT PPG PAINTS #PPG1007-5 "LAZY AFTERNOON"
EPT-4	PIPE BOLLARD	2 COATS PITT-TECH DIRECT-TO-METAL SEMI-GLOSS 90-1210	PAINT PPG PAINTS TRAFFIC YELLOW
EPT-5	CHAIN LINK FENCE	PREFINISHED GALVANIZED (NO PAINT)	GALVANIZED
EPT-6	COPING	PAINT GRIP GALVANIZED 2 COATS PITT-TECH DIRECT-TO-METAL SEMI-GLOSS 90-1210	PAINT PPG PAINTS #PPG1002-2 "ARCTIC COTTON"
SF-1	STOREFRONT	ANODIZED FINISH (NO PAINT)	PREFINISHED CLEAR ANODIZED ALUMINUM FRAMING FINISH w/ 1" LOW-E INSULATING TEMPERED GLASS, PPG INDUSTRIES SOLARBAN #8 (2) + CLEAR (OR APPROVED EQUAL). PROVIDE TEMPERED GLASS UP TO HORIZONTAL MULLION, AND HEAT STRENGTHENED ABOVE HORIZONTAL MULLION.
SF-2	AUTOMATIC SLIDING ENTRANCE DOOR WITH TRANSOM	ANODIZED FINISH (NO PAINT)	PREFINISHED CLEAR ANODIZED ALUMINUM FRAMING FINISH W/ 1" LOW-E INSULATING GLASS, PPG INDUSTRIES SOLARBAN #8 (2) + CLEAR (OR APPROVED EQUAL). PROVIDE TEMPERED GLASS IN SLIDING DOOR AND SIDE LIGHTS, AND HEAT STRENGTHENED AT TRANSOM.

MATERIAL/PRIMER SCHEDULE (EXTERIOR):

MATERIAL	PRIMERS
EXTERIOR GALVANIZED METAL	1 COAT PITT-TECH DIRECT-TO-METAL PRIMER 90-712
EXTERIOR FERROUS METAL	1 COAT PITT-TECH DIRECT-TO-METAL PRIMER 90-712
EXTERIOR CMU	1 COAT SPEEDHIDE ACRYLIC BLOCK FILLER #6-15XI
E.I.F.S.	1 COAT PPG SEAL GRIP PRIMER SEALER 17-921
PIPE BOLLARDS	1 COAT PITT-TECH DIRECT-TO-METAL PRIMER 90-712

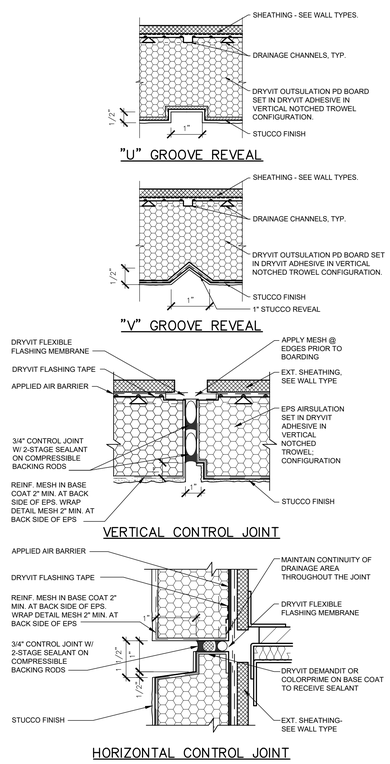

5 A4.0 TYP. EFFIS CONTROL & REVEAL JOINTS
SCALE: 1" = 1'-0"

CLIENT:
PETSMART
19601 North 27th Avenue
Phoenix, Arizona 85027 - (623) 580-6100
CLIENT REF #: 1234

PROJECT:
14K 2025 CANADIAN INSTRUCTION SET

FEBRUARY 12, 2025

CONSULTANT:

ARCHITECT:

SEAL:

CITY SEAL:

DISCLAIMER: COPYRIGHT:
THIS DRAWING AND DESIGN IS COPYRIGHT PROTECTED WHICH SHALL NOT BE USED, REPRODUCED OR REVISED WITHOUT WRITTEN PERMISSION BY PETSMART. THE CONTRACTOR SHALL CHECK AND VERIFY ALL DIMENSIONS AND UTILITY LOCATIONS AND REPORT ALL ERRORS AND OMISSIONS PRIOR TO COMMENCING WORK.
THIS DRAWING IS NOT TO BE SCALED.

ISSUED FOR:

NUMBER	ISSUE	DATE

PROJECT NO: CA0045686.0146
DATE: 02.12.25
ORIGINAL SCALE: AS NOTED
IF THIS BAR IS NOT 1" LONG, ADJUST YOUR PLOTTING SCALE.
DESIGNED BY:
DRAWN BY:
CHECKED BY:
PAGE #: 12 OF: 53

DISCIPLINE: ARCHITECTURAL

TITLE: **EXTERIOR ELEVATIONS**

SHEET NUMBER: **A4.0**